INFINITY™

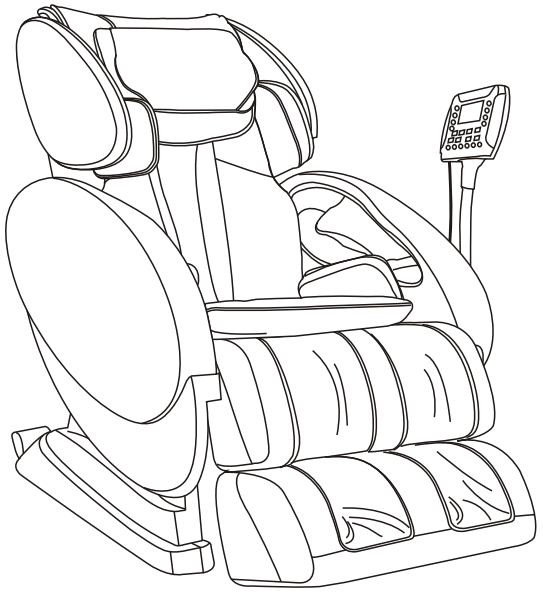

Infinite Therapeutics
a div. of Infinite Creative Enterprises, Inc.

68 Route 125
Kingston, New Hampshire 03848
U.S.A.
T. (603) 347-3005 F.(603) 642-9291
www.infinitetherapeutics.com

INFINITY DELUXE MASSAGE CHAIR

8500 Series
USER MANUAL

Thank you for your purchase of this product. Before using, please read this USER MANUAL carefully, and pay special attention to the safety precaution to ensure proper operation and use.

Please keep this USER MANUAL properly for further reference.

CONTENTS

SAFETY PRECAUTIONS----------1
NAME AND FUNCTION OF EACH COMPONENT----------3
Exterior structure----------3
Interior structure----------3
Power supply box----------4
Instruction on each component of main controller---------- 5
Function description on buttons---------- 5
Description on VFD displayer----------8
Functions and features ----------10
PREPARATION BEFORE USING---------- 11
Installation position---------- 11
Installation method----------12
Move method----------18
Turn on power supply----------18
Chair adjustment----------18
Before sitting down----------18
User selection----------18
PRODUCT STORAGE AND MAINTENANCE----------19
TROUBLE SHOOTING----------20
TECHNICAL SPECIFICATIONS----------21

TECHNICAL SPECIFICATIONS

Product name: INFINITY DELUXE MASSAGE CHAIR
Model No.: 8500 Series
Rated Voltage: 100-120V~
Rated Frequency: 50/60Hz
Rated Power: 260W
Safety Design: Class Ⅰ

TROUBLE SHOOTING

No.	Problem	Possible Cause	Solution
1	The sound “Xu Xu”, “Ta Ta” is heard.	It is a normal sound made by the working motor or the sound is produced when the massage ball is rubbed against the cloth cover.	It is normal and no need for treatment.
2	The machine can not be started up.	The power supply plug is detached.	Insert the power supply plug into the socket again.
		The power supply switch is not turned on.	Turn on the switch
		The fuse of massage chair blew out.	Replace a new one with the same mode
3	Some music can not be played normally	To check whether the format of music is MP3.	Replace the MP3 music file
4	Alarm sound is heard when pressing the music control button.	The U-disk is not connected well.	Insert the U-disk again.
		The U-disk is initializing	Wait 5-10 seconds
		The format of music files in U-disk is not unmatched.	To check MP3 music files with the help of computer.
5	No sound from the speaker or earphone	The volume is turned to lowest.	Turn the volume up
		The waiting time of the massage chair is over 2 hours.	Press the ⏻ button again
6	Backrest or legrest can not ascend or descend.	Over pressure is put on backrest or legrest.	Reduce the pressure on backrest or legrest.
7	The airbag installed at seat cushion or legrest can not work.	To check whether there is air tube blockage.	To clear the air tube
8	Some fault code (“ E0-E7”) is displayed while the main controller is buzzing.	The massage chair has automatically detected some exception.	Cut off the power supply and start up the machine again to check whether it can return to normal, if not, please send it to the professional maintenance center for repair and maintenance.

If abnormal phenomenon still remains after above measures have been taken to the massage chair, please contact local distributor for repair and maintenance.
Note: Do not dismantle the product by yourself, and our company shall shoulder no responsibility to the damage of the product or the injury of people caused by improper use! Thanks your cooperation.

SAFETY PRECAUTIONS

Safety Precautions

- Before using, please read this “SAFETY PRECAUTIONS” carefully to ensure proper operation.
- The following “SAFETY PRECAUTIONS” is of great help to your correctly use of this massage chair.
- To clearly indicate the degrees of danger and damage, the classes of accidents caused by incorrect use are classified into “WARNING” and “CAUTION” , instructions marked as followings should be strictly followed:

WARNING	Improper operation may cause injury to users.
CAUTION	Improper operation may cause users injury or product damage.

	Forbidden. Specific instruction will be indicated in the diagram drawings.(e.g, the left drawings means disassembly is not allowed.)
	Compulsory Specific instruction will be indicated in the diagram drawings.(e.g, the left drawings means to disconnect the power plug)

WARNING

COMPULSARY	We recommend that those with any of the following conditions should consult a doctor before using. 1. Those who are using electronic medical instrument imbedded in the body, such as cardiac pacemaker etc. 2. Those that are being treated by doctors, especially those who feel uncomfortable. 3. Those who are malignant tumor patients, heart disease patients, acute patients. 4. Women who are pregnant or menstruating. 5. Those with osteoporosis or fracture spine. 6. Those with skin disease or those whose skins are injured. 7. Those whose body temperature is over 38 degrees (Febrile Phase).
PROHIBITED	Do not allow the mentally disabled to use the chair alone. (It is OK under supervision)
	Do not allow children play on massage chair.
	Do not allow more than one person to use this massage chair at a time.
	If the power cord or power plug becomes damaged in any way you must disconnect from the mains supply immediately and consult an authorized service engineer for repair or replacement.
	Do not damage, process, excessively bend, pull hard, twist or knot power cord.
	Juveniles are not allowed to use this product.
NO DISASSEMBLY	Anyone else, except maintenance personnel specified by our company, should not disassemble, maintain, or remodel this massage chair. If any problem, please contact local dealer immediately.

SAFETY PRECAUTIONS

CAUTION

COMPULSARY	Please do not continuously use the massage chair over 20 minutes, and it is limited to massage a particular part of body in 5 minutes.
	Please put the massage chair on flat ground for use.
	When adjusting the legrest or backrest, please do not exert excessive force on it; in addition, keep children and pets well clear.
	When removing power plug, please hold the insulation plug, do not pull power cord.
	Please do not use the power supply that is beyond the specified electric voltage, as this may cause fire disaster or damage massage chair.
	Before using, please uncover the back cushion to check whether backrest or fabric is damaged; if damaged, please stop using this massage chair immediately, and contact franchiser for repair immediately.
	Please do not operate the controller with damp hands, and do not put heavy objects on controller.
	Only people less than 120kgs are acceptable.
	Please do not use other therapeutic equipments together with this massage chair.
	During use, if you feel uncomfortable, please stop use immediately and consult your doctor.
	This massage chair is designed and intended for non commercial household use only, do not use the massage chair for medical treatment.
	The massage chair is equipped with heating function, so people who are insensitive to heat must use it carefully.
	Always switch off power and remove the plug from the mains socket immediately after use and before cleaning.
PROHIBITED	To avoid causing discomfort, do not use the massage chair immediately after meals.
	Do not fall into sleep on massage chair, when the massage chair is working.
	Do not use the massage chair when you are drunk or feel bad.
	If the upholstery becomes dirty, please use only known good quality leather cleaner, do not use chemical cleaners, petrol or detergents etc, and do not spray pesticide on it.
	Do not sit on backrest, legrest, or armrest to avoid accidental injury or machine fault.
	Please do not smoke while using the massage chair.
REMOVE PLUG	Before maintenance, please pull out power plug. In addition, please do not insert or unplug the power plug with damp hands, to avoid electric shock.
	When the massage chair is not in use, please switch off power and remove the plug from socket. When power is off, please cut off power supply immediately and pull out the power plug from socket.

PRODUCT STORAGE AND MAINTENANCE

Maintenance

- Please twist the cotton cloth which has been dipped in neutral detergent before wiping the back cover, hand rest, legrest, air tube and some other plastic components, then use a dry cotton cloth to wipe them again.
- Use dry cloth to wipe the controller, DVD, and power supply box.
- Use a piece of cloth that has been dipped with neutral detergent to wipe the back cushion and pillow, then use a piece of wet cloth to wipe them, and finally put them to a well-ventilated place for natural drying.

Caution

- Make sure to pull out the power supply plug firstly before maintenance. Do not use wet hands to pull out the plug to avoid electric shock. When clean the back cover, please be cautious of detergent entering into the power supply box!
- Do not use abrasive cleaning agents like benzene or thinner to clean the product, otherwise, the color of upholstery may fade or the massage chair may crack or be eroded.
- Do not iron the upholstery.

Storage method

- Wipe off dust and dirt from the product after use, if the product is not to be used for a long period of time, please cover the product with a dust cover (self provided).

Caution

- Do not store the product under direct sunlight or in places of high temperature. This may cause the color of the upholstery to fade.

Kind reminding

During daily use, please check whether the following symptoms exist:

- Scorched smell exists.
- When touch the wire, the power is on, but sometimes off.
- The power supply cord is hot.
- Other abnormal symptom

Caution

- Please stop using the massage chair to avoid breakdowns and accidents occurring if any above symptom exists.
- Turn off the power supply switch and pull out the power supply plug, and then contact the local distributors or headquarters for repair and maintenance.
- Except all the normal operation and maintenance mentioned above, any other repair and maintenance can only be operated by our authorized dealer or service agent.

PREPARATION BEFORE USING

Machine Adjustment

- Put the backrest to a limiting position, raise the legrest to the highest position and stretch it out to the longest position with the controller, meanwhile, please make sure sufficient space is left for the massage chair.
- After testing each function, please reset the chair, and turn off the power supply switch.(Please refer to Buttons function on Page 5 and VFD display on Page 8 while you are choosing massage program)

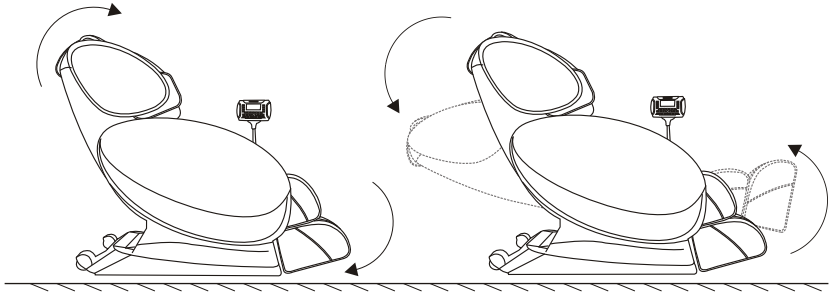

Before sitting down

- Make sure the leg massager well connected with the main chair.
- Before sitting down, make sure all the components are back to their original position, if not, please turn on the power supply switch and reset the components.

Caution

- Do not sit on the massage chair when the legrest is raising.
- Do not put heavy burden onto the legrest suddenly, otherwise, the mechanical structure may be damaged.

User selection

Based on your physical condition and the massage time you needed, you can choose any of the following automatic procedure to enjoy a targeted service.

- Recover: It is suitable for doing it after work or one hour later after supper to help people recover their spirit.
- Extend: It is suitable for office workers or drivers.
- Relax: It is a kind of leisure massage; especially suit for morning or noon relaxation.
- Refresh: It is suitable for alleviating the sore or pain at back, waist or neck. It can massage at a particular sore or pain part of body with semiautomatic functions.

NAME AND FUNCTION OF EACH COMPONENT

Exterior structure

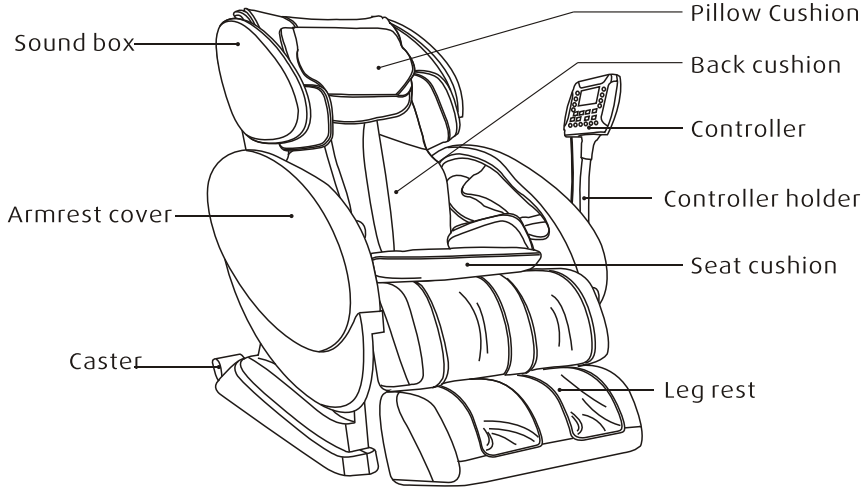

Interior structure

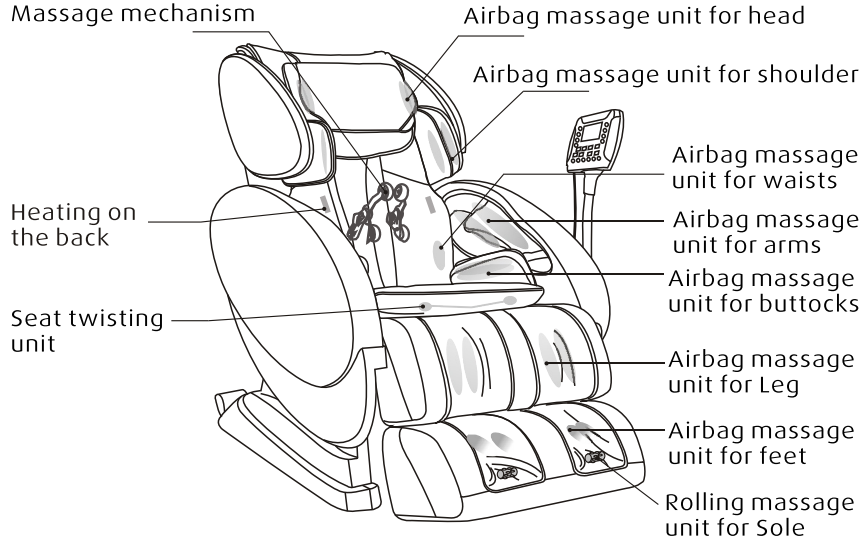

NAME AND FUNCTION OF EACH COMPONENT

Power supply box

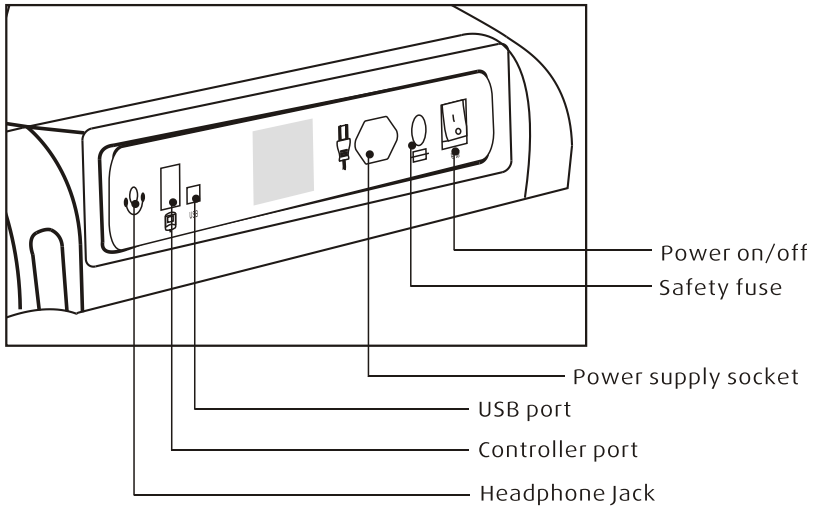

Caution:

- Do not let children play on the chair in case that accident happens due to the power supply box.
- Please power off the chair and unplug the chair from the power supply socket after the massage finishes
- Do not use the chair under thunders in rainy days.
- Please power off the chair and unplug the chair from the power supply socket when the chair is not in use, so that children won't accidentally get the chair started.
- Please store the chair if it is not in use for a long time.
- Please do not move the massage chair on easily damaged surfaces, such as wooden floor and carpet.
- Do not use the massage chair in damp environment to avoid electric leakage or electric shock.
- Do not place the massage chair near stove or where it will be exposed to strong sunlight for long periods as this may damage the leather and bleach the color.

PREPARATION BEFORE USING

Move method

- The equipment can be easily moved with the caster installed at the bottom of the product.
- Ascend the backrest to the highest position.
- Turn off the power supply switch and pull out the plug.
- Raise the front part of the chair as shown on the picture below, and move the chair to a desirable place.

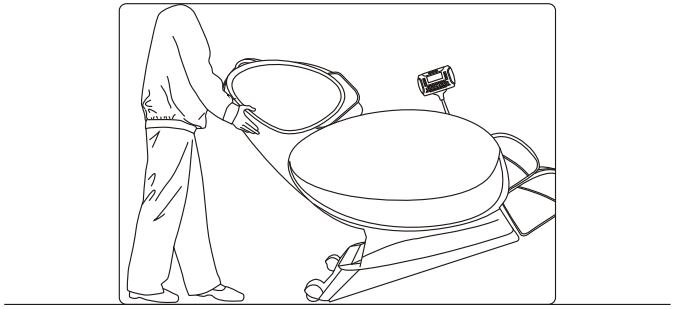

Caution

- Do not move the chair while people is sitting on the chair.
- When moving the massage chair, please hold its base and backrest instead of its armrests (at least 4 people).

Turn on power supply

- Put the power supply plug into a well grounding three-core power supply socket.
- Turn on the power supply switch located at the bottom of backrest.

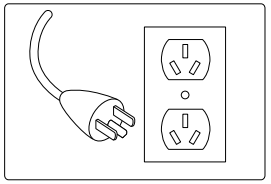

Caution

- Before starting up the machine, please make sure the power supply cord and exposed electric wire have not been damaged.
- Before putting the plug into the power supply socket, please make sure the power supply switch is turned off.

PREPARATION BEFORE USING

Step 6 Installation of back cushion and buffering cushion

- Fix the buttering cushion and back cushion on the backrest with zipper, and install the heater accessory on the back cushion, connect the connector of pillow and waist' s air tube as the illustration shows. Connect the lower part of the cushion with seat cushion by linking tape.

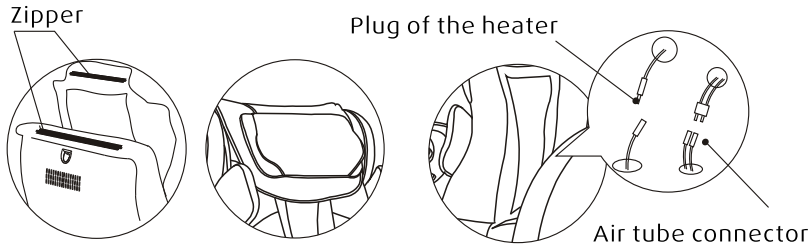

Step 7 Installation of seat cushion

- Place the seat cushion on the seat shelf, and fix the air tube .
- Connect cloth on the seat cushion with the linking tape.

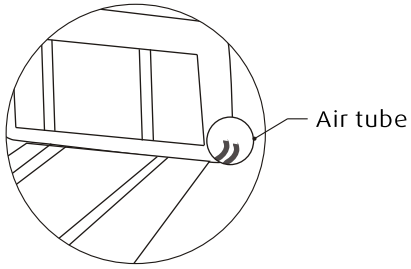

Step 8 Other accessories

- Connect the controller,wire to respective jack on the power supply box.
- Place the controller in the tray.
- Connect the power and switch on the chair, use the controller to return the back rest to normal position.

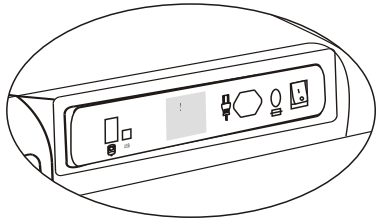

NAME AND FUNCTION OF EACH COMPONENT

Instruction on each component of main controller

Function description on buttons

- When the massage program is in POINT mode, keep Up or Down button pressed to pinpoint massage position.
- When the body sensing is on and the indicating light for shoulder adjustment is on, press Up and Down button to pinpoint shoulder position.

- Press this button to turn on or off the seat swivel massage, and the relevant icon will brighten or go out.
- When seat swivel massage is under working, press this key to choose proper intensity within 1-3 degree. Under max intensity degree, press this key to stop this function.
  (Notice: When the icon is flashing, it is the fault prompt.)

- Press this key to turn on/off heating function on back and waist.

- Keep pressing this key to adjust backrest and legrest to a desirable position.

- Keep pressing this key to adjust legrest to a desirable position.

NAME AND FUNCTION OF EACH COMPONENT

Pause/Play Stop Previous Next Volume- Volume+

Note: press Previous once to return to the beginning of the present episode, continuously press this button twice to return to previous episode.

ZERO GRAVITY

▶ When this icon is constant on, Zero Gravity starts. Zero Gravity includes weak and strong status, which cater for different people needs. When you feel the massage force is weak and need stronger massage, please press Zero Gravity button again for strong status. When it reaches strong zero gravity, press this button again to cancel zero gravity. The chair returns to original position when it is in regular massage mode and the Zero Gravity icon is off.

RECOVER

Recover：Recover auto function on

▶ When this icon is off, press this button to start the whole auto program, which is mainly for strong massage on big scope.
▶ When the icon is constant on, the chair is in Recover mode.

REFRESH

Refresh：Refresh auto function on

▶ When this icon is off, press this button to start the whole auto program, which is mainly for moderate strength massage on big scope.
▶ When the icon is constant on, the chair is in Refresh mode.

Power button : Massage chair on/off

▶ When this icon is flashing, all massage functions is not available. Press this button to start massage, and then all massage function buttons are flashing for choice. Press anyone of these to start massage, whose defaulted time is 20mins.
▶ When this icon is constant on, press this button to end all massage functions, the chair goes back to its original position.
▶ When this icon is off, all buttons on the controller is not available.

EXTEND

Extend：Extend auto function on

▶ When this icon is off, press this button to start the whole auto program, which is mainly for weak massage on big scope.
▶ When the icon is constant on, the chair is in Extend mode.
（Remark: This program has stretch massage.）

RELAX

Relax：Relax auto function on

▶ When this icon is off, press this button to start the whole auto program, which is mainly for moderate strength massage on whole body.
▶ When the icon is constant on, the chair is in Relax mode.
（Remark: This program has air pressure massage of pillow.）

AIR BAGS

▶ When this icon is off, and massage function is already on, press this button to start airbags massage mode.
▶ When this icon is constant on, press this button to end airbags massage.
（Remark: In automatic program, the airbags and roller is linked.）

PREPARATION BEFORE USING

Step 4: Installation of the shoulder massager and speaker.

▶ Connect the wire from upper side of backrest with the wire from the speaker.
▶ Insert the three joint pins in shoulder massager and speaker to the three connecting tubes in backrest.(after inserted well, please move down the slider to expose the locking screw), fasten them by locking screws, and move back the slider.
(It is the same installation method for the other side)

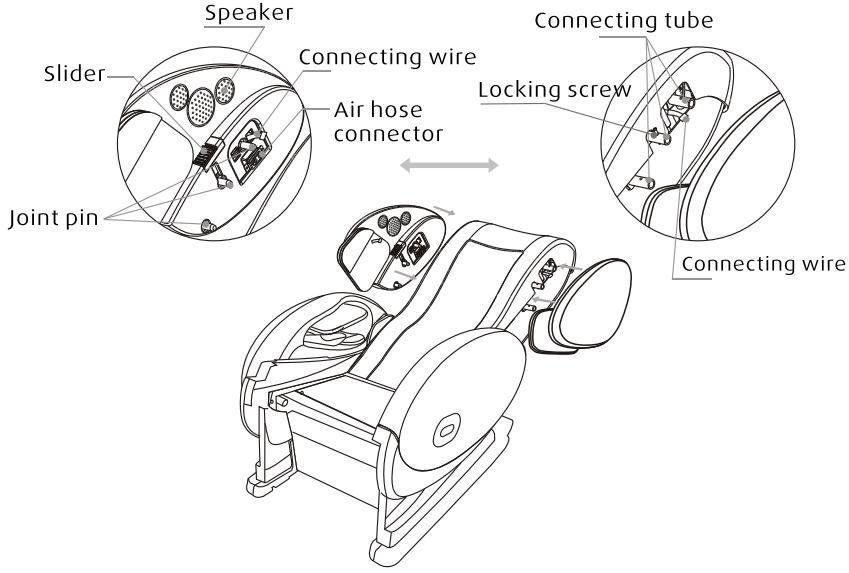

Step 5 Installation of controller holder

▶ Take off the small cover on the left armrest
▶ Aim the installation hole of the controller holder to the hole on armrest, and then fasten them together by screws, lastly place the small cover.

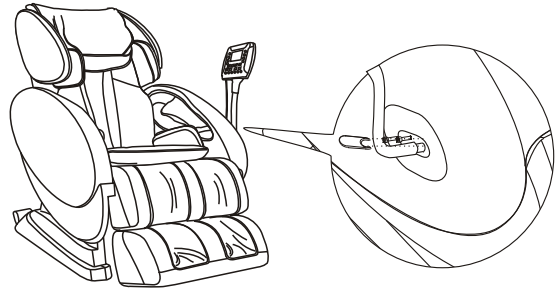

PREPARATION BEFORE USING

Step 3 Installation of leg massage shelf

- ▶ Insert the leg connection wire plug to its jack.
- ▶ Connect air tube from the leg massage shelf with its port on the seat shelf.
- ▶ Aim the coupling shaft port on the leg massage shelf to the coupling shaft on the seat and fasten them with one screw each side.
- ▶ Paste the folding PU cover on the leg massage shelf with linking tape on the cloth of the seat.

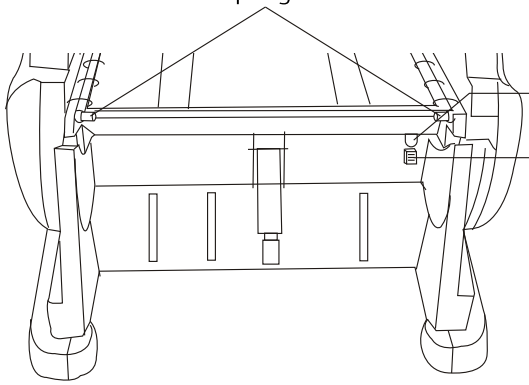

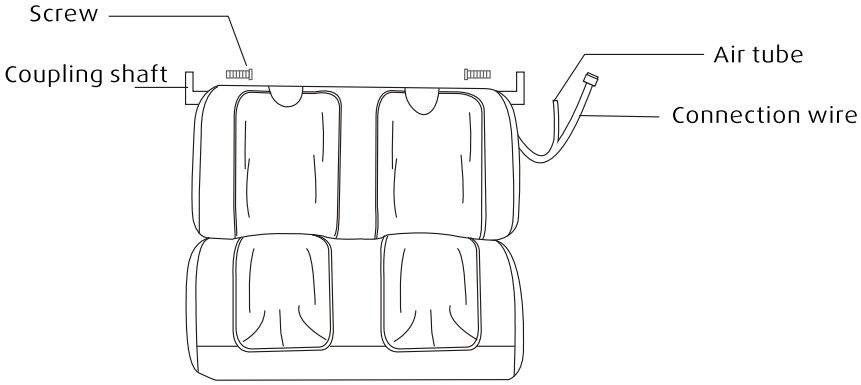

NAME AND FUNCTION OF EACH COMPONENT

FOOT ROLLERS Press this key to turn on/off rolling massage function on sole

- ▶ When the indicator light is off, press this key, the light will turn to flash status, then interval rolling massage on sole is started and press twice, the indicator light will be constantly on, then continuous rolling massage on sole is started, press it the third time, rolling massage on sole will be turned off. When the indicator is flashing or constantly on, the Product is under rolling massage on sole
  （Remark: In automatic program, the air bag and roller is linked.）

ZONE

- ▶ When the massage functions are under manual mode, the indicator light is constantly on, this key is operable, press it to circularly choose full, partial and point, and the back massage mechanism correspondingly conduct full, partial and point mode massage.
- ▶ When the indicator light is off, this key is not operable

WIDTH

- ▶ When the massage functions are under manual mode, the indicator light is constantly on, this key is operable, press it to circularly choose narrow, medium and wide, and width of the crank arm correspondingly change.
- ▶ When the indicator light is off, this key is not operable.

SPEED

- ▶ When the massage functions are under manual mode, the indicator light is constantly on, this key is operable, press it to circularly choose 6 different speeds.
- ▶ When the indicator light is off, this key is not operable.

FUNCTION

- ▶ When the indicator light is off, if massage function is under working, press this key to switch to manual mode.
- ▶ When the indicator light is on, press this key to circularly choose kneading, pummel, kneading $knocking, knocking, shiatsu and rhythm massage.

ARMS & SHOULDERS UPPER BODY LEGS & FEET

Arms & shoulders, upper body, legs & feet

- ▶ When massage function is under manual mode, if the indicator light is off, press this key to open turn on the corresponding function, then the indicator light will be on.
- ▶ When the indicator light is constantly on, press this key to stop corresponding airbag massage function.

AIR INTENSITY

- ▶ When the indicator light is constantly on, press this key to choose strength among weak, medium and strong.
- ▶ When the indicator light is off, this key is not operable.

Caution:

- ▶ Every auto program has lots of massage action on shoulder. The chair conducts body shape sensing on the initiation of auto program (or after electric cylinder position is adjusted), so the user has to sit well on the chair at this moment until body shape sensing finishes. (i.e. shoulder adjustment on VFD display stops flashing).
- ▶ To better adapt to the environment, the controller of this chair has dynamic sampling. Within 5 seconds after the chair powers on, please don't use hand or other metallic substance to touch controller display; otherwise it will affect its button sensitivity.

NAME AND FUNCTION OF EACH COMPONENT

VFD display description

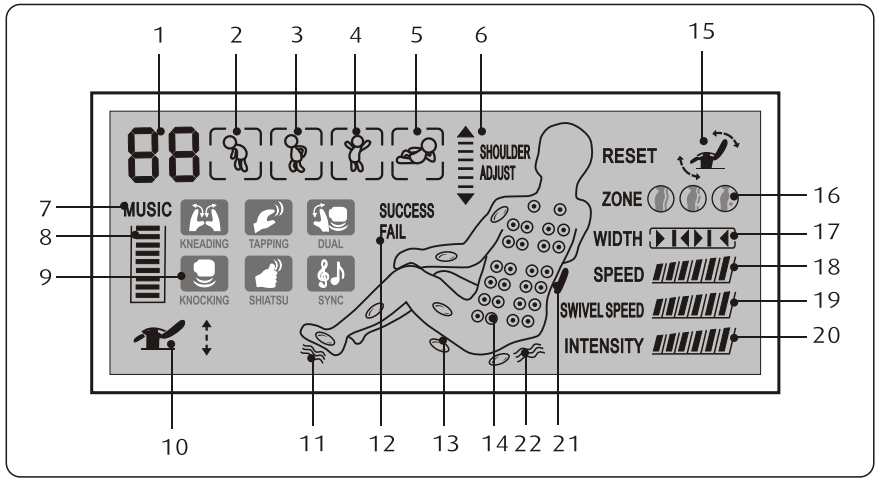

1.Time display: It shows working time upon the start of massage with defaulted time of 20 minutes.
2.Recovery indicator
3.Refresh indicator.
4.Extend indicator
5.Relax indicator
Under the massage modes: Recover, Refresh, Extend or Relax, the icon will be on, but not under other modes.
6.Shoulder position adjustment indicator
During body shape sensing, after it automatically senses on the back part of shoulder, this area is lighted to remind the user to micro adjust shoulder poison by Shoulder Up/down adjustment
7.USB Flash disk connection indicator
8.MP3 Volume indicator
9.Massage modes: to show present massage mode

Kneading ,tapping ,dual ,knocking ,shiatsu , sync

10.Zero Gravity cylinder performance indicator: lie upwards;return downwards.
11. Rolling masage on sole indication
12. Body sensing status indication
13. Zone of airbag massage dynamical indiction
14. Massage dynamical indication

PREPARATION BEFORE USING

▶ Make sure the 4 connection sticks completely inserted into the eccentric joints, then use cross screwdriver to fasten the armrest by turning 180 ° clockwise.(The sharp point on the eccentric joint shall point downward " ⊕ ") It is the same installation method for the other armrest.

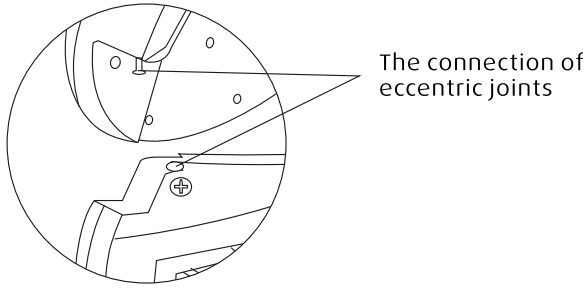

▶ The connection of armrest locks with backrest.
Hold up the rear part of the armrest, push inward to let the gap of armrest lock aim at armrest spindle, then push the armrest to fasten them together.(Press downward the handle of the lock to unlock armrest and backrest)

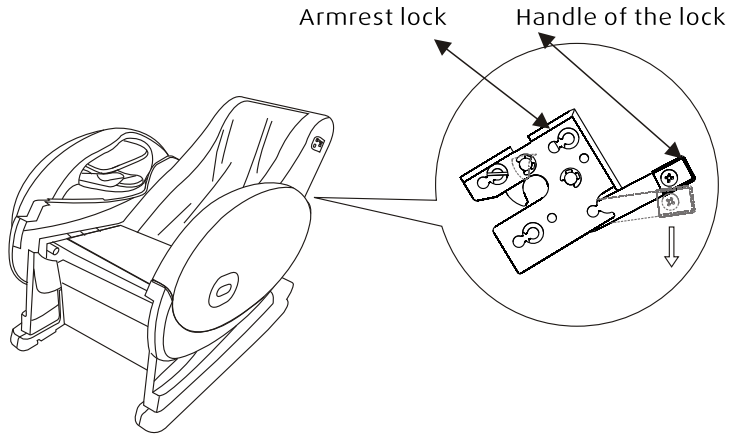

Installation method

Step 1: Take out the components of massage chair

- Open the main carton, and take out the quilting product packages, accessory carton and the main body of the massage chair carefully.
- Check whether the components are complete (please check one by one according to the packing list)

Step 2: Install left and right armrests

- connect air tube port under the armrest to its corresponding output air tube. (It is the same way for the other side)

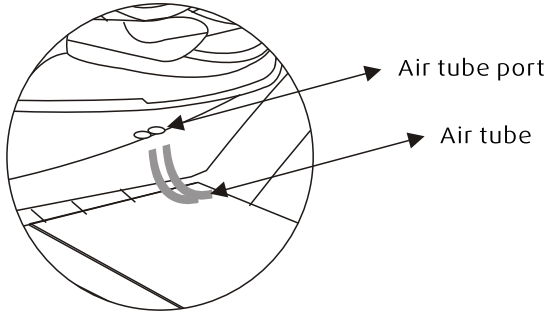

- The connection of armrest and armrest shelf: Aim the three connection sticks of armrest to the three eccentric joints on the armrest shelf, then press downwards on the armrest and fasten it by the eccentric joint. (If the rear screws are hided by back cover, so they can't be fastened, please power on the chair to raise the back). It is the same installation method for the other armrest.

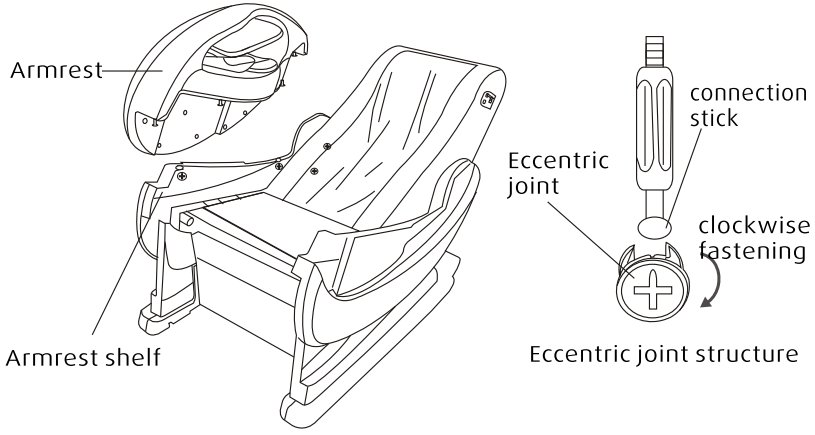

15. working indicator of reclining motor for backrest and legrest
16. back massage position mode:

Full back massage: cover the entire back

Partial back massage: centralized as current massage point, the massage range takes up one third of the full back

Fixed point massage: under manual mode, choose fixed point massage to repeat the current massage technique or previous ones.

17. back massage width indication
    3 width adjustable: narrow, medium, wide
    narrow, medium, wide

18. back massage speed indication
    6 degrees adjustable

19. Swivel speed indication
    3 degrees adjustable

20. Airbag intensity indication
    5 degrees adjustable

21. back heating indication
22. seat twist indication

FUNCTIONS AND FEATURES

1.shouler position
shoulder detecting function can locate exact position of shoulders of different people, thus to ensure the most effective massage on shoulder and neck.
2.Zero gravity
Abiding and imitating principle of space capsule, the Product can give fully relax and most comfortable massage posture, it conforms to ergonomics and keep back, buttocks and legs in a weightless status, thus to ensure people on the Product lay in a most relaxed reclining angle, then weight of body will fully be released on the Products, muscles will also be in a completely relax condition, from which people can enjoy weightless massage experience.
3.Four-wheel massage mechanism
Innovated design of four wheels massage mechanism and walking structures, it conforms to ergonomics.
4.6 massage strengths
Under manual mode & anto mode, 6 massage strengths are optional, people can choose the most desirable one according to health condition and massage time.
5.airbag pressure massage for arms
upper and lower airbags design to realize wavelike massage on arms.
6.Shoulder massage
Side airbags installed on both sides of shoulders, it can give air pressue massage on shoulders.
7.air pressure massage pillow
Pillow airbags can conduct swinging and kneading massage on neck.
8.Waist twist and airbag massage on seat
Waist twist function in seat, airbag pressure massage on thigh and waists.
9.Airbags pressure massage on leg and feet, rolling massage on sole
Multi-layer airbag design to ensure quick and abundant massage on leg &feet, three rows of rollers located under sole to conduct shiatsu massage on sole, arch and hell of feet.
10.Mp3 & DVD (optional)
Mp3 function, DVD is optional as per requirement of customer.
11.Touch key
Controller is adopt to touch key, it looks more fashional.
12.when you are choosing a massage program,press the same button within 0.5 seconds to select the desired program run time of 45/30/20/10 mins.
13.The chair will raise and return to its stand-by position once the massage program is completed.

PREPARATION BEFORE USING

Installation position

Safety distance for the periphery of massage chair

- The horizontal interval of backrest between the highest and lowest points should be over 50cm.
- The horizontal interval of legrest between the highest and lowest points should be over 40cm.

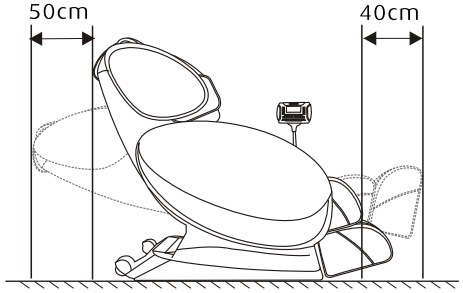

Floor protection

- The floor may be worn by the massage chair, so it is advised to put some cushion material (for instance: a carpet) under the massage chair to protect the floor.

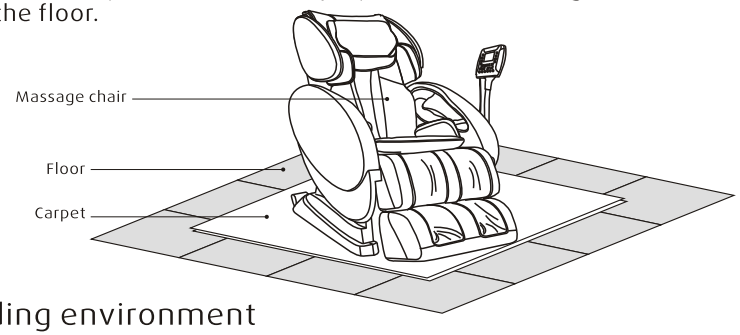

Surrounding environment

Keep the massage chair away from damp places (for example: bathroom) to avoid electric leakage.

Keep the massage chair away from high temperature sources (for example: stove) to avoid fire or damage to leather material.

Earthing

- This massage chair belongs to Level One electrical appliance, make sure to use three-core power supply socket and to guarantee the ground wire connected to the power supply socket has obtained good ground connection to avoid electric leakage, electric shock and some other negative effect during use.